Frequency inverters

Series E800 - 400V

The professional inverter for all variable torque, applications. All I/O channels programmable, two mathematically linkable 12-Bit analogue inputs. Build in PID controller, with specific HVAC functions. MODBUS interface, for inverter control, and for reading and setting of all inverter I/Os, in this way the inverter hardware can be implemented in subordinated control systems. Application specific hardware available: Special filters (classB), dV/dt limitation PFC chokes build in as standard (inverters above 30kW). Fieldbus Gateways available for all common used building automation systems. PC-Software, for diagnosis, control and inverter programming.

Specifications

Supply voltage:	3-Phase 380 - 460Vac / 44 - 67Hz
Max intensity:	0,2kW/0,6A –450kW/730A according model
Control type:	5 dig. Inputs (PNP/NPN)
	2 x 12 BIT analogue inputs 0-10V, 0(4)-20mA
	1 analogue output, varius functions 0-10V, 0-20mA
	1 digital output (programmable)
	1 relays switch 5A 230V (programmable function)
	MODBUS
Switch ON/OFF:	External contact
Output:	0 - Vinput, 0,5 - 650Hz III
Protection:	Under - over voltage
	Overcurrent, overload, motor overload, short circuit
	Input phase loss, motor phase loss
	Inverter overtemperature, motor-overload I^2xt
Connection:	Terminal Block
Enclousure:	Plastic, Ip20 (IP64 on request)
Optionals:	Remote display/keypad unit
	Brake resistors for all different applications
	PC-Link Software for parameter setting, control an diagnosis
	Fieldbus gateway modules for all common bus systems

Advantages

Special for water supply, wastewater treatment, fans and pumps, booster stations, heating, air conditioning, building automation. Agriculture, irrigation systems. Material handling, conveyor belts. Screw compressors, vacuum pumps, blowers. HVAC Retrofit / Enerdy optimizing.
High quality and low price, easy installation, low installation costs

CE Norms

These controllers comply with following mentioned European norms:
EMC 89/336/CEE modified by 92/31/CEE and low voltage norm 72/23/CEE
RoHS compliant

Series E800 - 400V

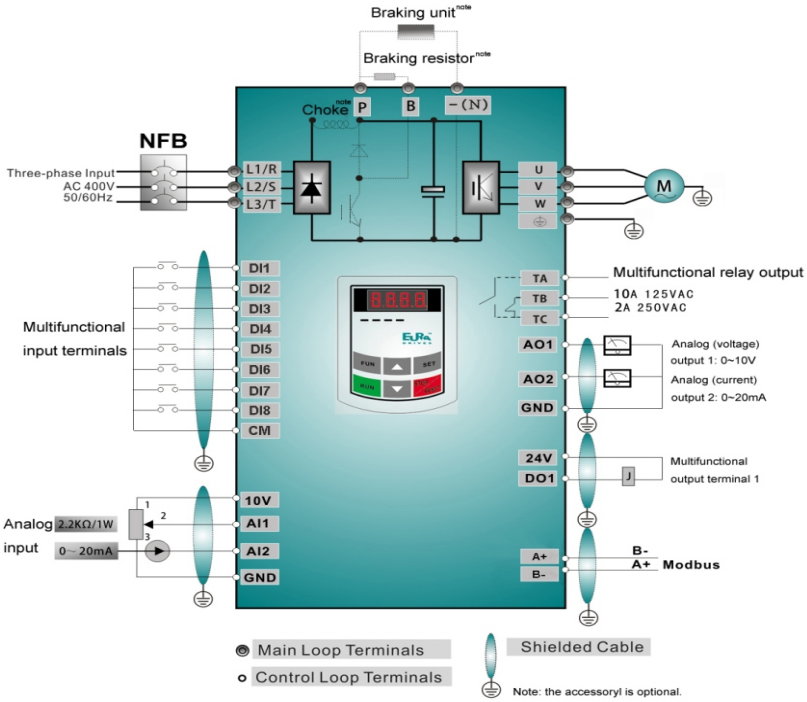

Basic Wiring Diagram for multi-stage speed control macro (NPN type)

MODEL	INTENSITY	DIMENSIONS (mm)	FRAME
E800-0002-T3	0.2kW – 0.6A	80 x 138 x 135	E1
E800-0004-T3	0.4kW – 1.0A		
E800-0005-T3	0.55kW – 1.5A		
E800-0007-T3	0.75kW – 2A	106 x 180 x 150	E2
E800-0015-T3	1,5kW – 4A		
E800-0022-T3	2.2kW – 6.5A		
E800-0040-T3	4.0kW – 9.0A	138 x 235 x 152	E4
E800-0055-T3	5.5kW – 12A		
E800-0075-T3	7.5kW – 17A	156 x 265 x 170	E5
E800-0110-T3	11kW – 23A		
E800-0150-T3	15kW – 32A	205 x 340 x 196	E6
E800-0185-T3	18.5kW – 35A		
E800-0220-T3	22kW – 40A		
E800-0300-T3	30kW – 50A	265 x 435 x 235	C3
E800-0370-T3	37kW – 68A		
E800-0450-T3	45kW – 82A	314 x 480 x 285	C4
E800-0550-T3	55kW – 98A	360 x 555 x 265	C5
E800-0750-T3	75kW – 130A		
E800-0900-T3	90kW – 165A	410 x 630 x 300	C6
E800-1100-T3	110kW – 200A		
E800-1320-T3	132kW – 240A	516 x 760 x 326	C7
E800-1600-T3	160kW – 290A		
E800-1800-T3	180kW – 340A	560 x 900 x 342	C8
E800-2000-T3	200kW – 380A	400 x 1300 x 385	C9
E800-2200-T3	220kW – 420A	535 x 1330 x 380	CA
E800-2500-T3	250kW – 460A		
E800-2800-T3	280kW – 500A	600 x 1450 x 380	CB0
E800-3150-T3	315kW – 550A		
E800-3550-T3	355kW – 610A		
E800-4000-T3	400kW – 670A	600 x 1580 x 380	CB
E800-4500-T3	450kW – 730A		